2238

# DIGITAL FREQUENCY DISPLAY

# MODEL PD-800


INSTALLATION INSTRUCTIONS

HEATHKIT MODEL HW-101

PALOMAR ENGINEERS

# PD-800 DIGITAL FREQUENCY DISPLAY

Purpose. Many of the classic radios of the 1960's and 1970's are still in use. They work well and sound good. The newer modern rigs have many "bells and whistles", a lot of them not really useful. But they do have one very important improvement: a digital readout. The PD-800 Digital Frequency Display adds this valuable feature to your older rig.

Description. PD-800 works with transceivers that have three oscillators in their heterodyne scheme. One usually a crystal oscillator, another a VFO or variable frequency oscillator, and the other a fixed frequency "carrier oscillator". Three cables bring these signals to the Digital Display where, in two mixers, the exact operating frequency is regenerated. This is displayed on a six digit numerical readout.

Installation. The three cables that bring the signals to the Digital Readout are provided. They plug into the rear of the readout: Black plug into the CARRIER OSC socket, Red plug into the INJ socket, and grey plug into the C socket. A separate instruction manual showing the cable connections to the transceiver is provided for your particular transceiver model.

A DC supply of 10-14 volts at 200 milliamperes is required. It connects to a 2.5 mm socket on the rear panel. A mating plug is provided. The shell is negative; the tip is positive. DC power pack cubes (such as the Palomar PS-90) which plug directly into an AC outlet work well.

Operation. Set the TUNE knob to point straight up (12 o'clock position) and the BAND MHz switch to the band the transceiver is on. Slide the power switch to ON and the display should light up. If the display does not lock up firmly adjust the TUNE knob until it does.

The TUNE knob makes possible operation on any frequency from 1.5 to 40 MHz. For the amateur bands that are marked on the bandswitch this control usually can be left in the straight up position.

The primary function of the TUNE control is for operating on frequencies other than the bands marked on the bandswitch. For example, to use the readout on the 18 MHz band set the bandswitch to 14 and turn the TUNE control in the + direction until the display locks in. To tune for the 12 MHz broadcast band (if your rig is general coverage) set the bandswitch to 14 and turn the TUNE control in the - direction until the display locks in.

PALOMAR ENGINEERS

P.O. Box 462222, Escondido, California, U.S.A.

# CABLE INSTALLATION - HEATHKIT MODEL HW-101

1. Three cables are provided. Each has a 39-pf disc capacitor on one end and a color coded plug on the other. The plugs go to the PD-800 Digital Readout. The capacitors connect to the HW-101.

2. First, find or make a way for the cables to get to the HW-101 interior and to exit from the enclosure.

3. Connect the capacitor of the cable with the red plug to pin 7 of V12 on the Bandpass Circuit Board (see pictorial). Ground the shield to any convenient ground point. The connections can be made across R223 (see schematic).

4. Connect the capacitor of the cable with the grey plug to pin 7 of V11 on the RF Driver Circuit Board (see pictorial). Ground the shield. The connections can be made across R407.

5. Connect the capacitor of the cable with the black plug to pin 3 of V16 on the Modulator Circuit Board (see pictorial). Ground the shield. The connections can be made across R9 (see schematic).

6. Reassemble the HW-101 enclosure.

7. Plug the cables into the PD-800 Digital Readout.
   Black plug into CARRIER OSC socket.
   Red plug into INJ socket.
   Grey plug into C socket.

8. Refer to the "PD-800 Installation and Operating Manual" for operating instructions.

# CIRCUIT BOARD X-RAY VIEWS

**(viewed from foil side)**

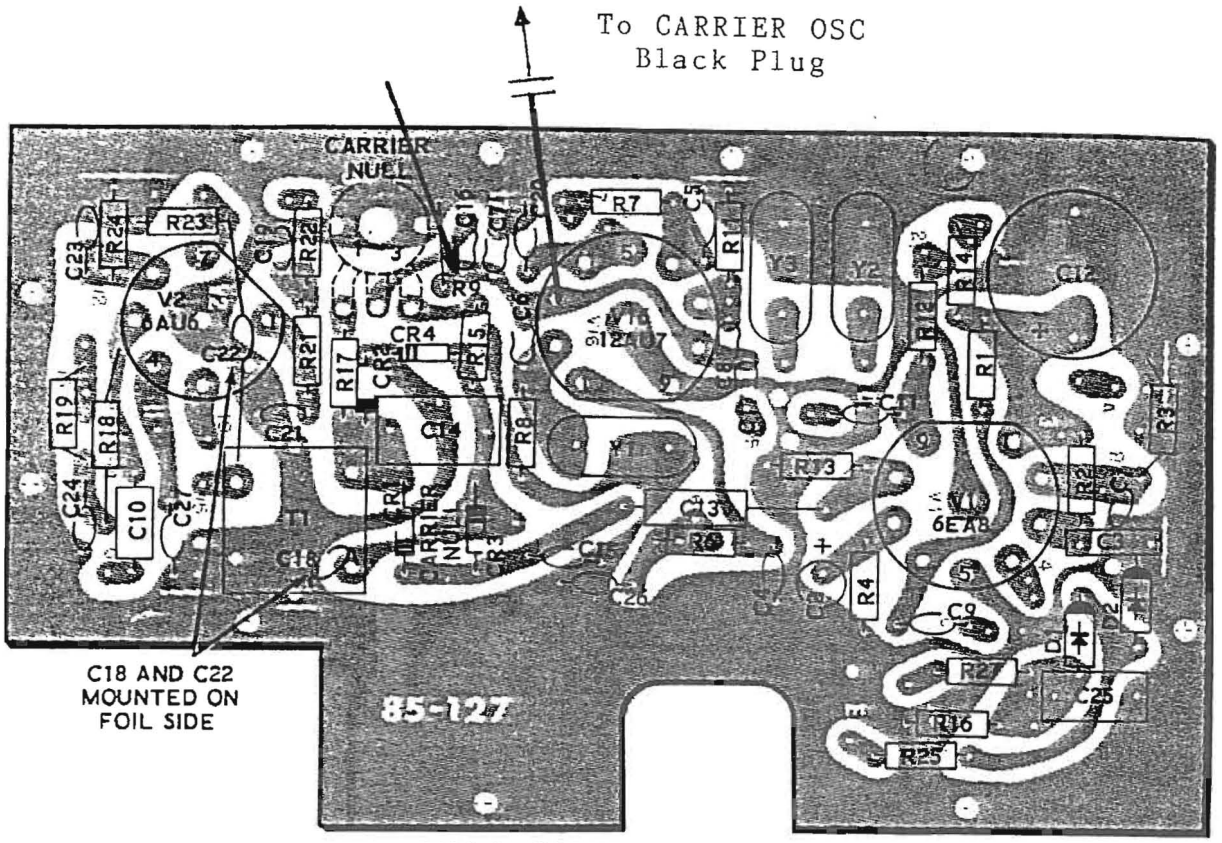


MODULATOR CIRCUIT BOARD

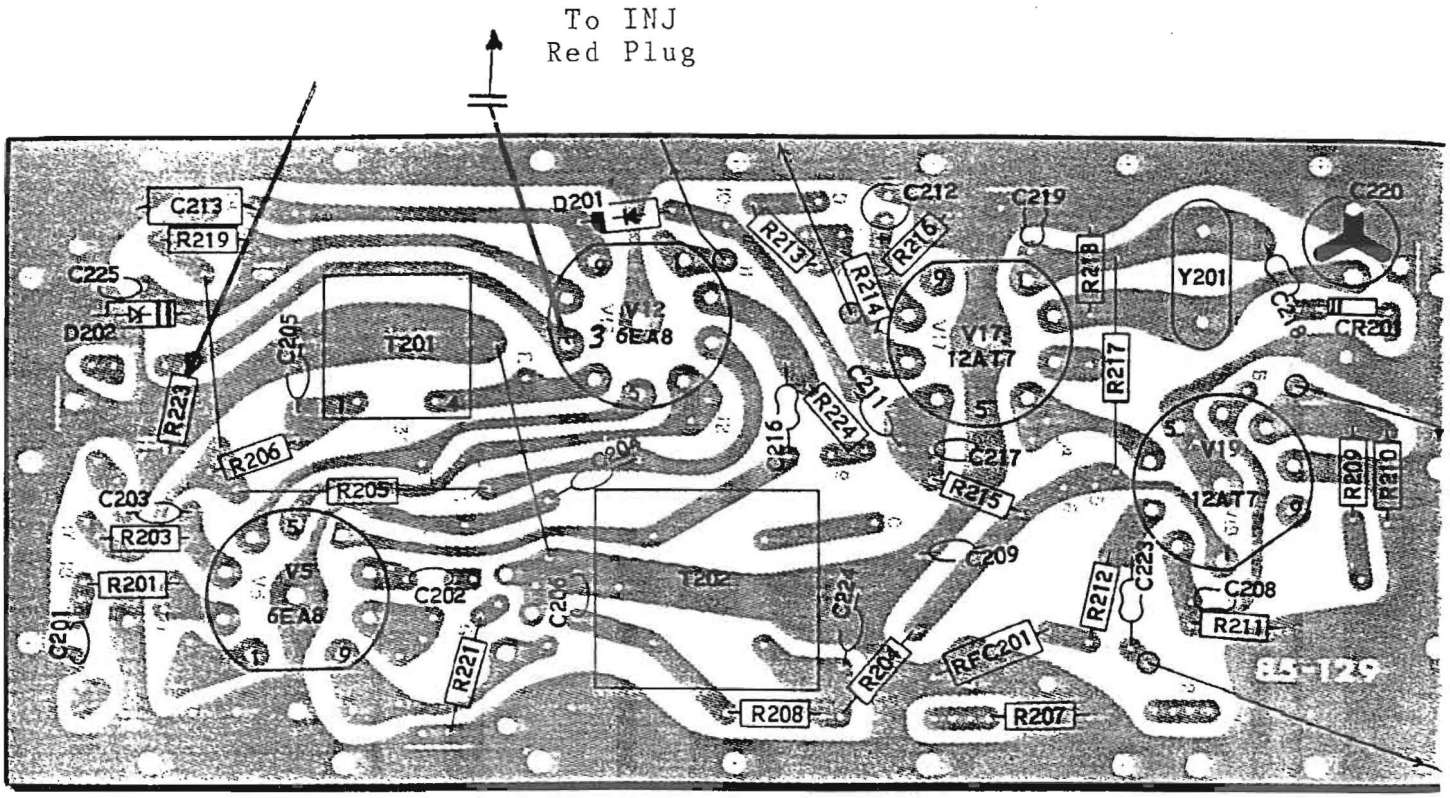


BANDPASS CIRCUIT BOARD

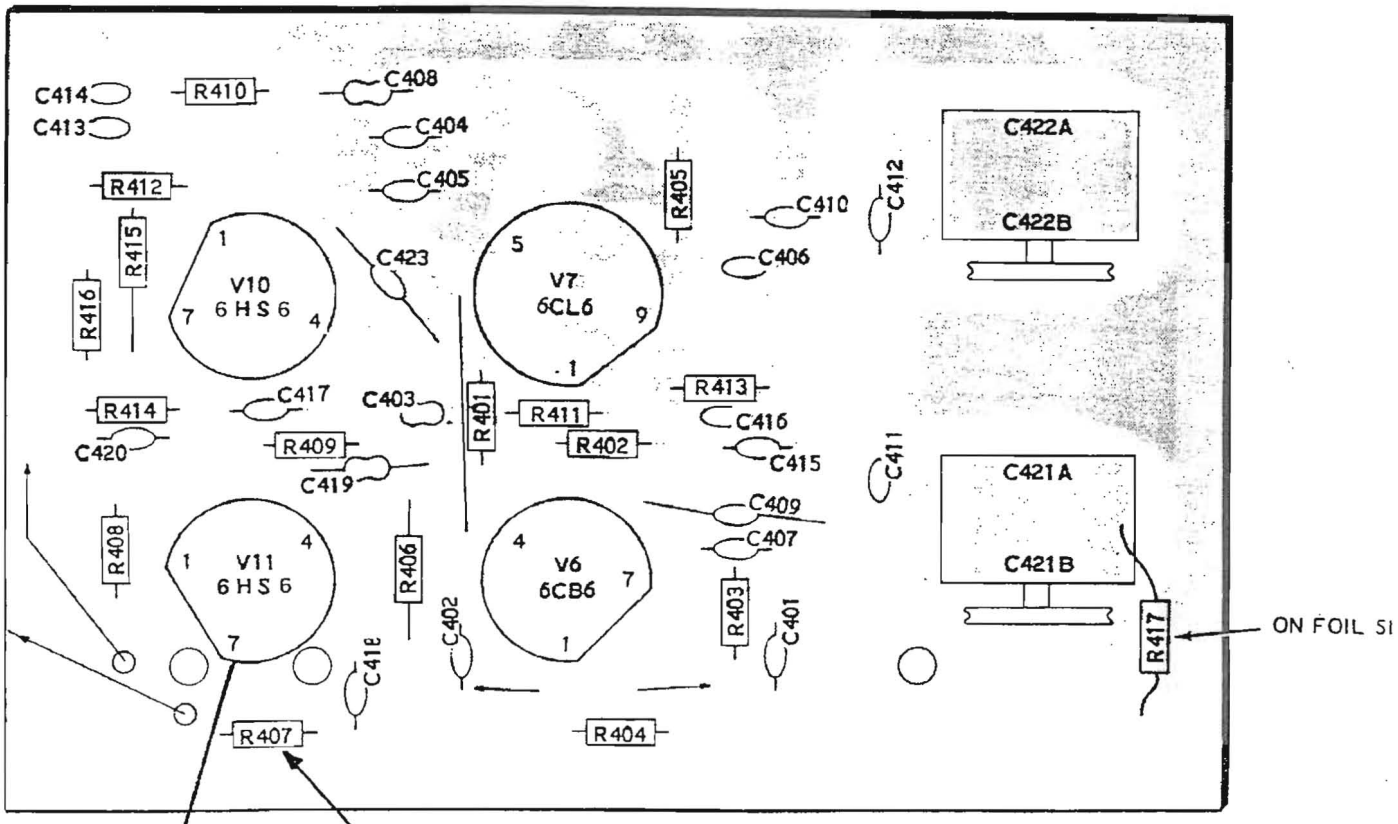


RF DRIVER CIRCUIT BOARD

To "C"
Grey Plug

# SCHEMATIC - HW-101

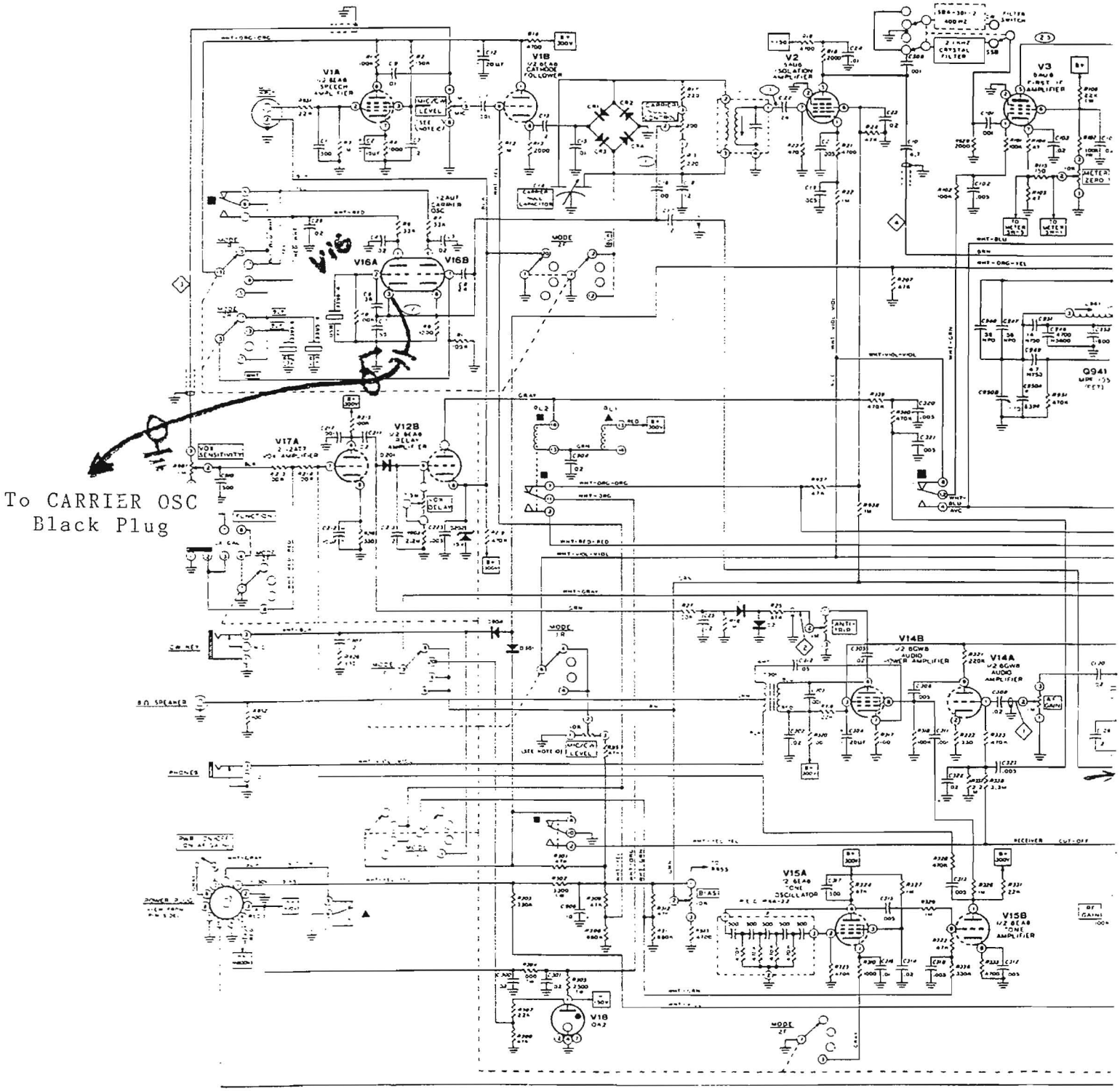

# SCHEMATIC - HW-101

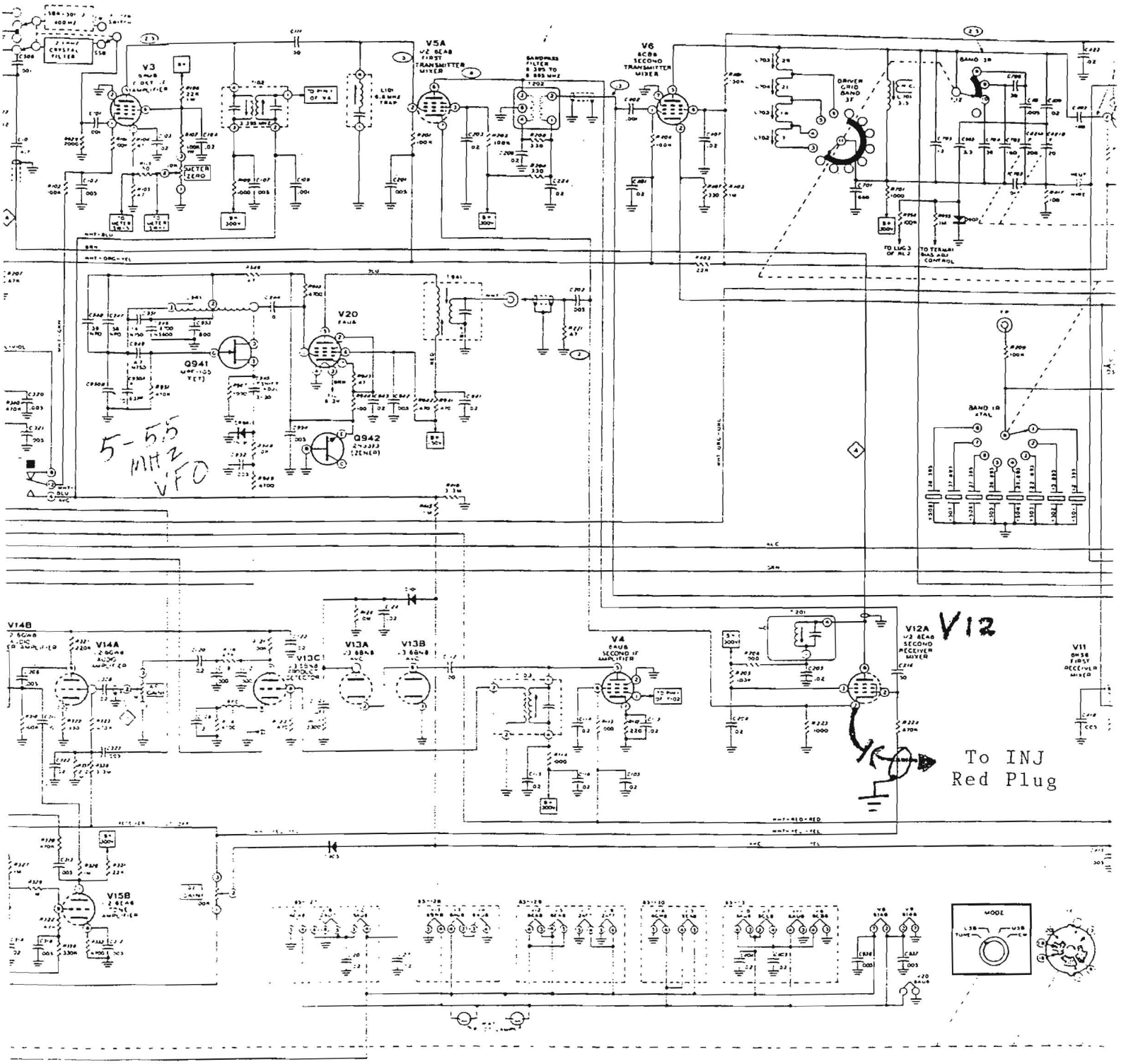

# SCHEMATIC - HW-101

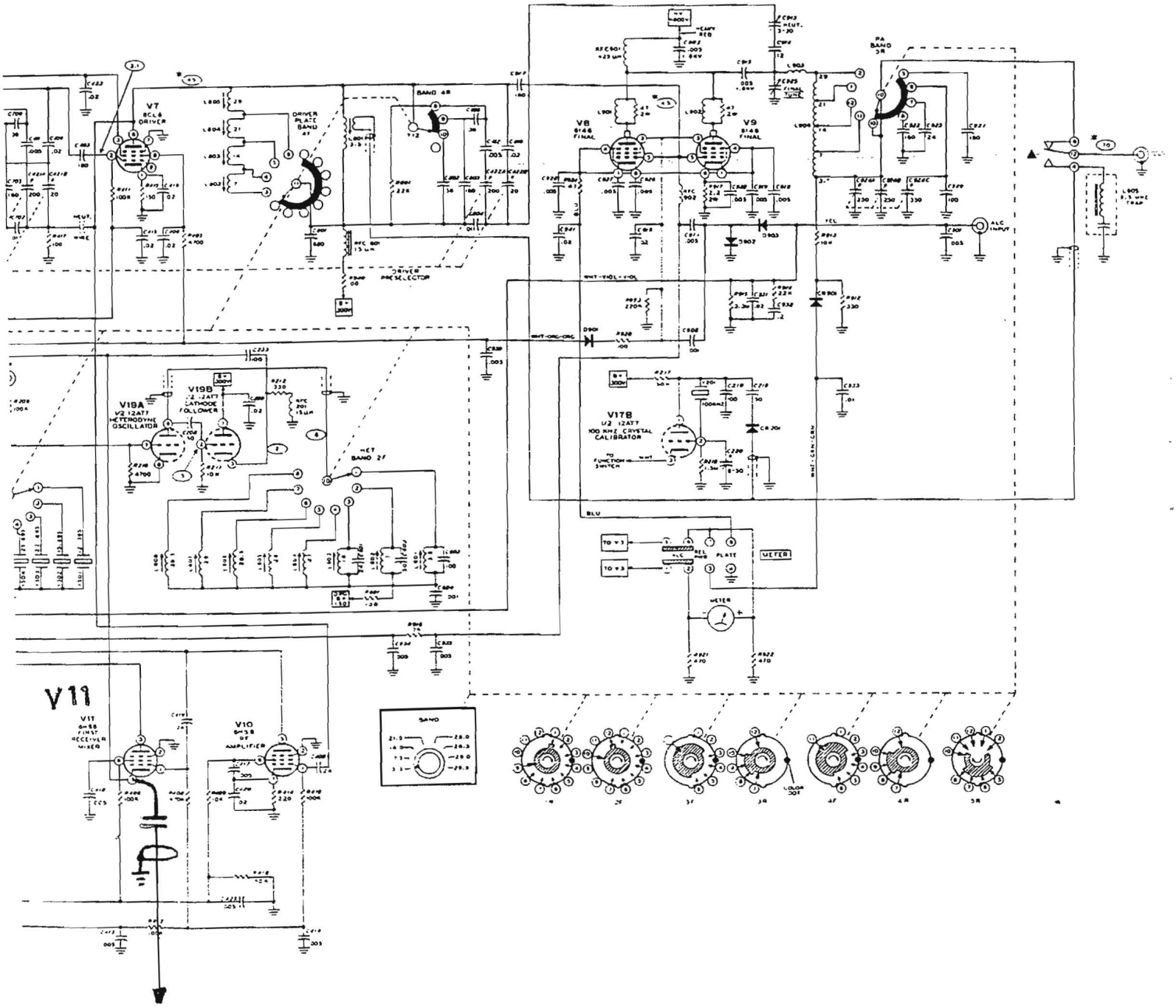


To "C"
Grey Plug

# SCHEMATIC - HW-101

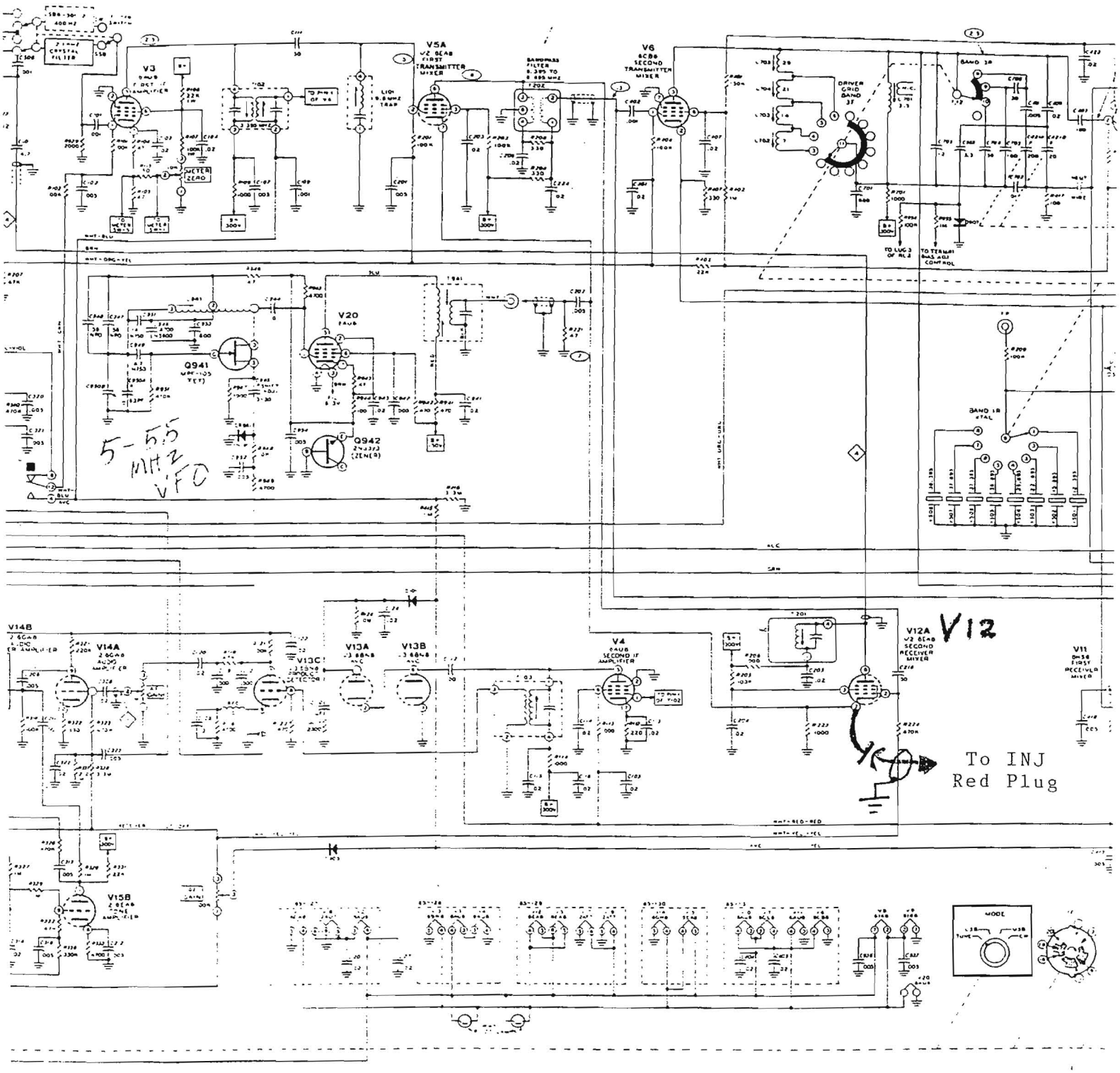

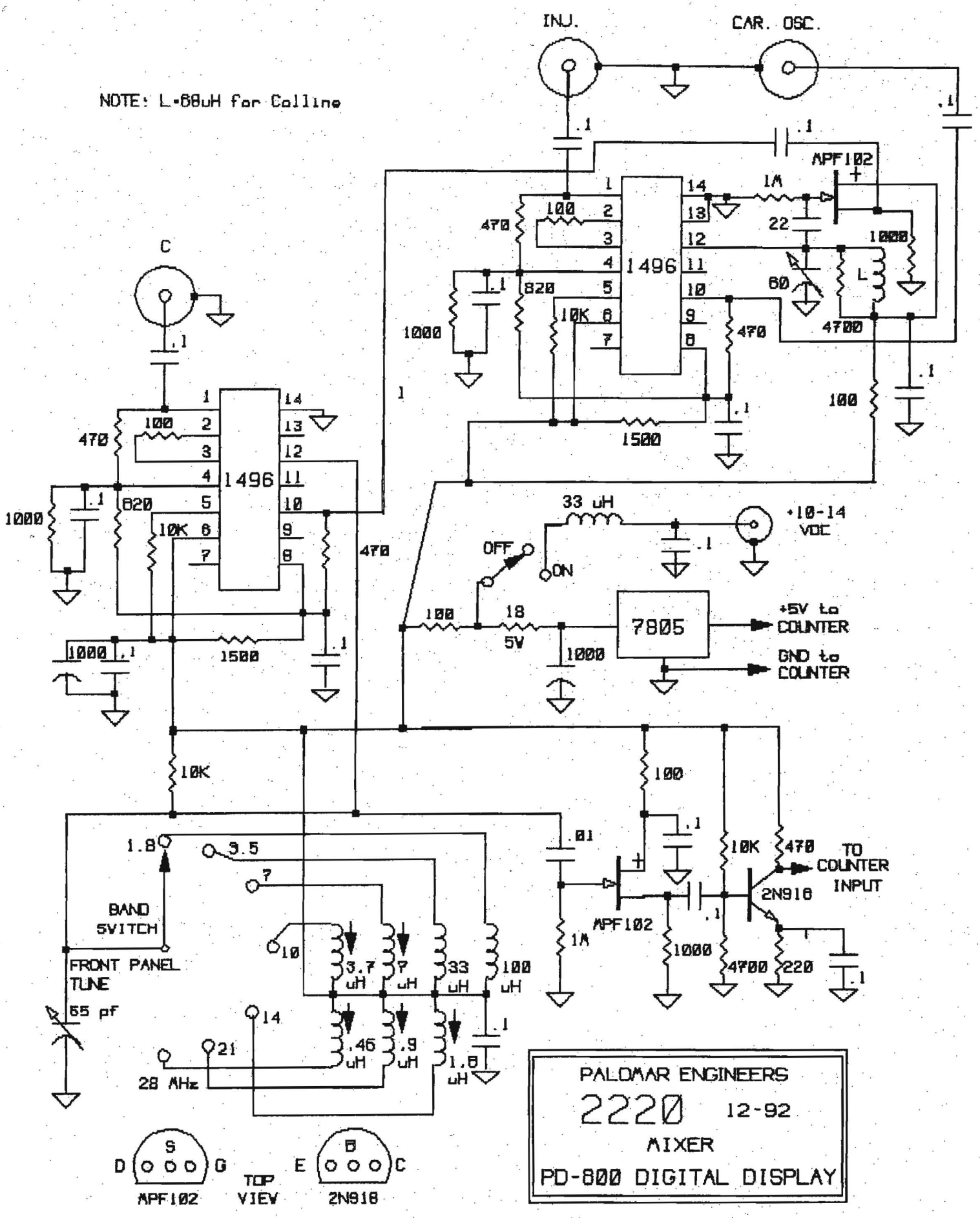
NOTE: L=68uH for Colline
INJ.
CAR. OSC.
C
1496
1496
MPF102
2N918
7805
+10-14 VDC
+5V to COUNTER
GND to COUNTER
TO COUNTER INPUT
OFF
ON
33 uH
BAND SWITCH
FRONT PANEL TUNE
55 pF
28 MHz
3.7 uH
7 uH
33 uH
100 uH
.46 uH
.9 uH
1.8 uH
PALOMAR ENGINEERS
2220 12-92
MIXER
PD-800 DIGITAL DISPLAY
TOP VIEW
MPF102
2N918

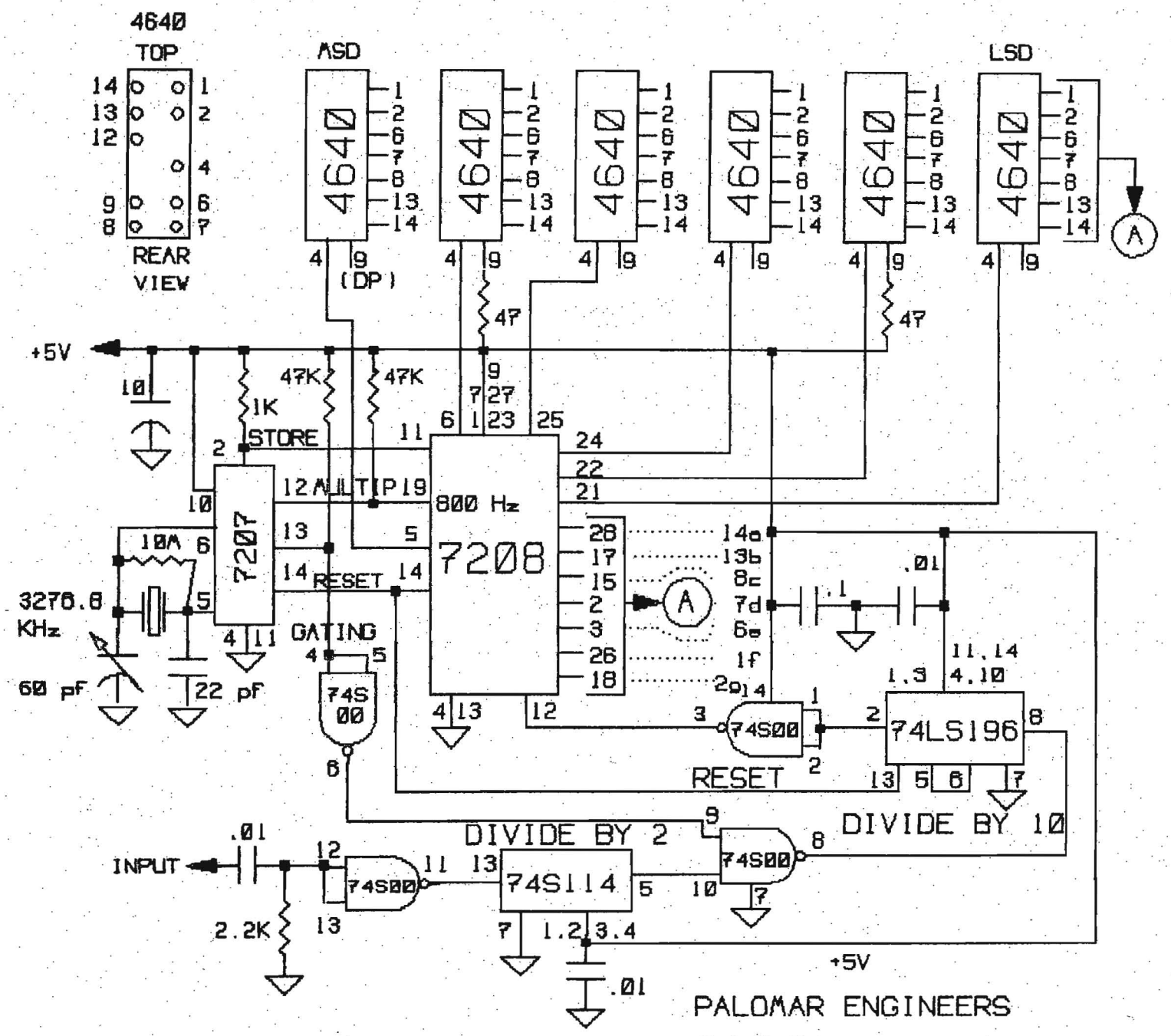


PALOMAR ENGINEERS

2192 5-92 REV. A 2-93

Frequency Counter

PD-700 DIGITAL DISPLAY